KSR601,5,8

Adjustable Shower Rod with Roller Ball Shower Curtain Rings

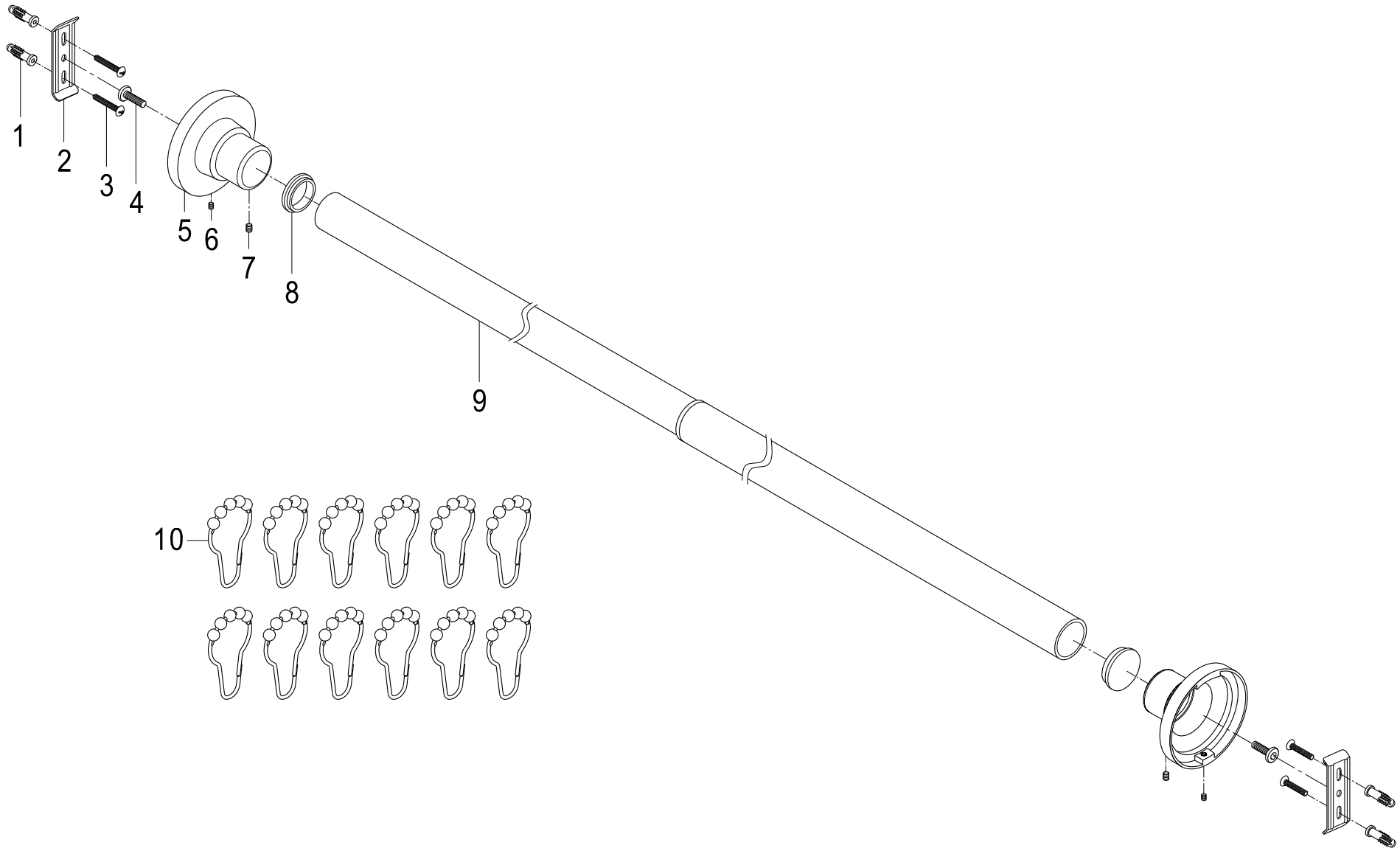

Ref# KSR601,5,8 | 2016-08-A